C34 Dimensions

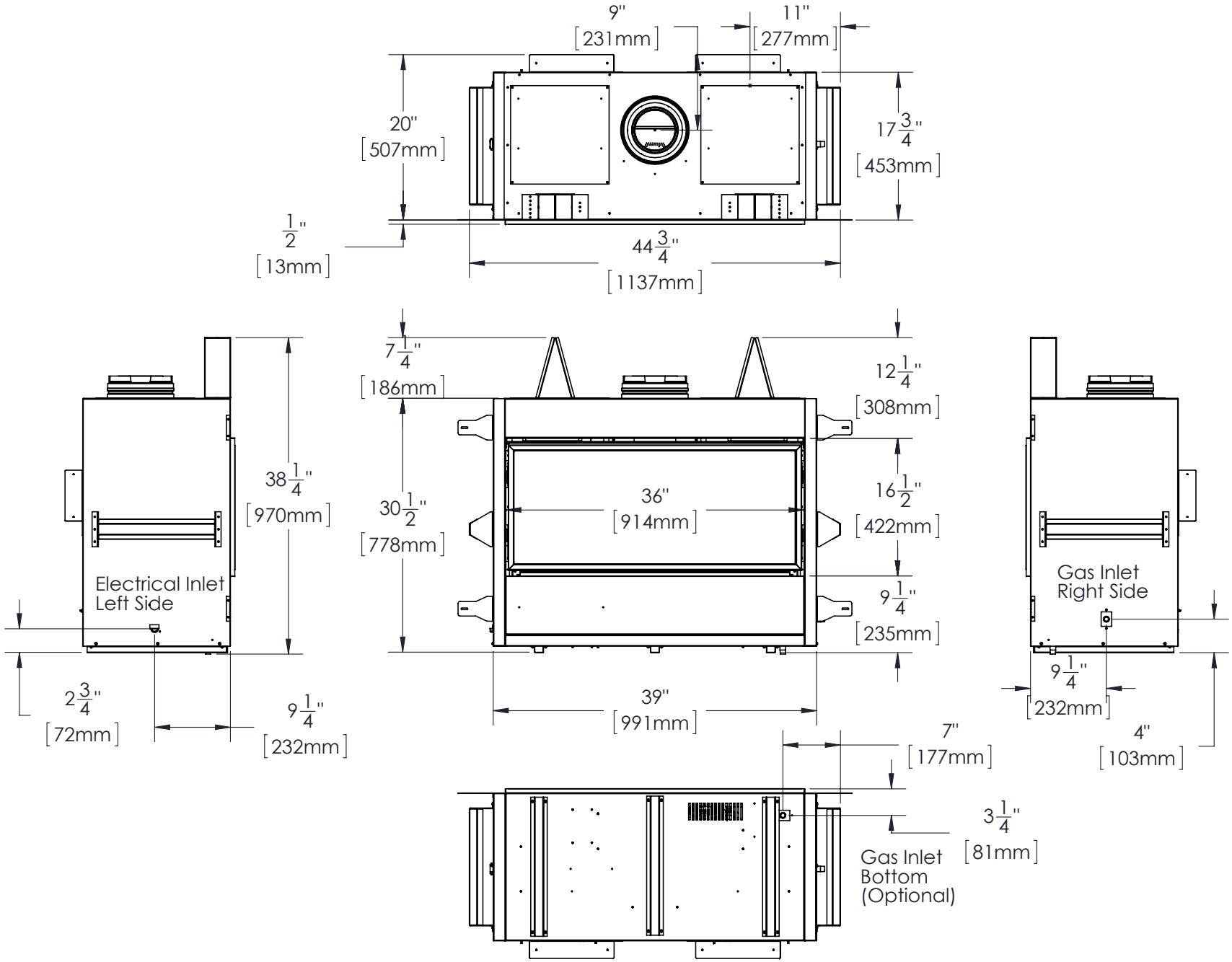

Measurements are approximate please consult owners manual for details.

Issued 03/24/17